DIMNS MARKED DENOTES ▽ SAFETY/REGULATION (F) CRITICAL FIT/FUNCTION (M) MAJOR FIT/FUNCTION (M2) MINOR FIT/FUNCTION

TABLE-1 △1

FINISH GRIND SIZE	PLATING TYPE	PLATING THICKNESS BEFORE POSTCHROME GRINDING		CHROME THICKNESS AFTER POSTCHROME GRINDING (F)	Ø'C' (F)	MODEL
		Ni (μm) (F)	Cr (μm)			
△1 Ø13.908~Ø13.918	NICKEL + HARD CHROME	15±3μ	18±3μ	15±3μ	Ø13.960~13.987	P1EF REAR SHOX

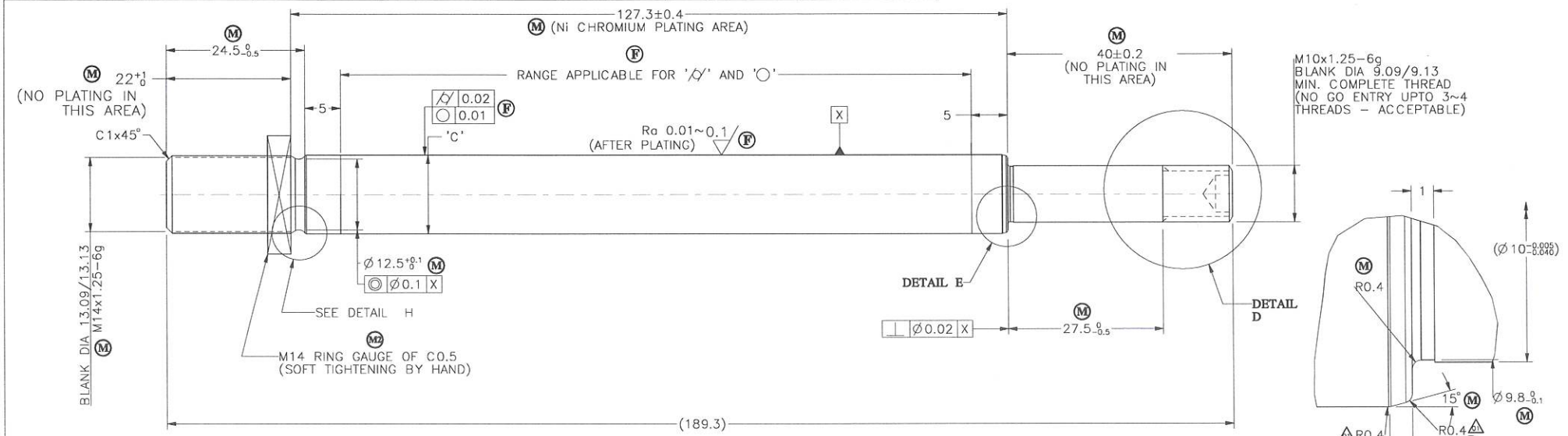

DETAIL E
SCALE 8:1

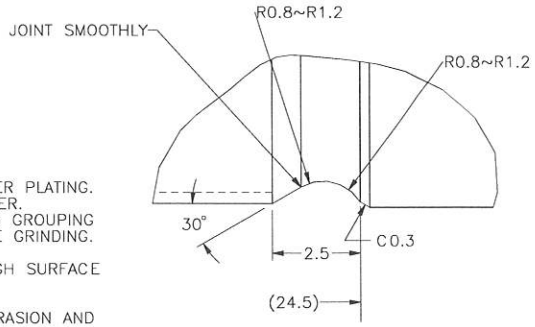

DETAIL H
SCALE 10:1

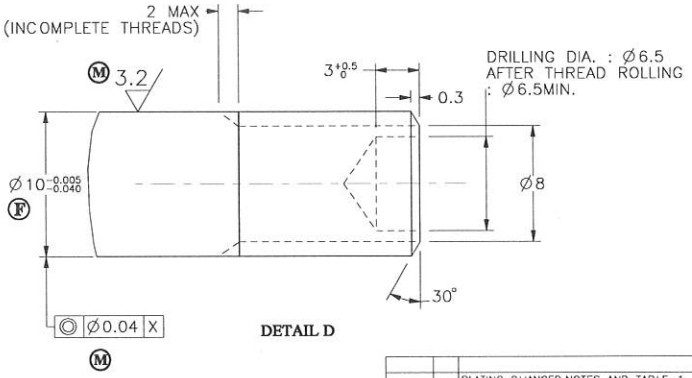

DETAIL D

NOTE:

1.a. TO BE GROUND TO FINISH SIZE AFTER PLATING. MATERIAL REMOVAL 3~5μ ON DIAMETER.
△1 1.b. BASED ON THE DIAMETER MINIMUM 3 GROUPING TO BE DONE BEFORE POST CHROME GRINDING.

(M) 2. MUST BE FREE FROM PIN HOLE, ROUGH SURFACE & BLISTER AFTER PLATING.

(M) 3. MUST BE NO CHATTER, SCRATCH, ABRASION AND BRUSIE ON SURFACE

(M) 4. CHROME HARDNESS : 800 Hv MIN. / 50gms LOAD

5. PARTING PIP NOT PERMITTED

△1 6a. CORROSION RESISTANCE : CASS TEST 96 Hrs MIN RATING NO. 9MIN
6b. PLATING VALIDATION : CORROSION RESISTANCE AS MENTIONED, OTHER PARAMETERS AS PER GSP 0103.

MASTER COPY ONLY IF RED

DATE	REV	ALTERATION	E.C.N.NO
20.07.22	01	PLATING CHANGED,NOTES AND TABLE-1 UPDATED. R0.4 WAS R0.2.	273-01
13.6.19	00	PRODUCTION RELEASE	211-14
28.9.17	A3	DIM 127.3 WAS 124.8. DIM CHANGED FOR EASY MEASUREMENT. C0.3 ADDED	211-05
31.8.17	A2	DIM Ø12.5 ADDED. GEOMETRIC TOLERANCE UPDATED. & PRE-PRODUCTION RELEASE.	211-02
1.12.16	A1	RELEASED FOR OTS	---
01.10.16	D0	RELEASED FOR COSTING	---

SUPERSEDES :
GENERAL TOLERANCE ASPER :PE /GT/001
DESIGN SOURCE REF.
RELEASE FOR ☐COSTING ☐PROTOTYPE ☐OTS ☐PRE-PRODUCTION ■PRODUCTION

GABRIEL INDIA LTD.

SCALE	SHEETS	FINISH:	MASS:
1:1	1 / 1	REFER TABLE	201g

DRAWN BY: PARIKRISHNAN R
DATE: 20.07.22
CHECKED BY: VRISHALLY
DATE: 20.07.22
APPROVED BY: MURAGENDRA M
DATE: 20.07.22

NAME:- PISTON ROD
MATERIAL:- SAE 1035 (R.M = Ø14.25±0.04) AS PER GP 136-5
PART NO:- 184040165
REV. 01

ALL DIMENSIONS ARE IN MM. | NO MANUAL ALTERATION | DO NOT SCALE | IF IN DOUBT PLEASE ASK | SIZE : A2

CONFIDENTIAL: THIS DRAWING AND THE INFORMATION THEREIN ARE THE PROPERTY OF GABRIEL INDIA LTD., AND SHALL NOT BE REPRODUCED, COPIED RECORDED IN ANY MEDIA, USED FOR ANY OTHER PURPOSE OR DELIVERED AND/OR DISCLOSED TO ANY THIRD PARTY WITHOUT WRITTEN CONSENT OF GABRIEL.